A1141 | A3

Released by HIWIN design group.

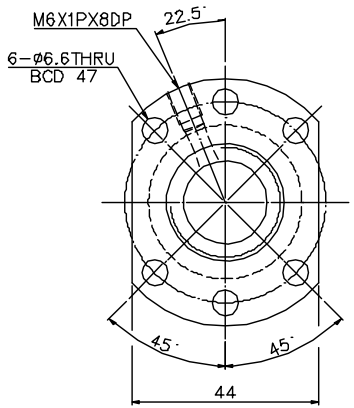

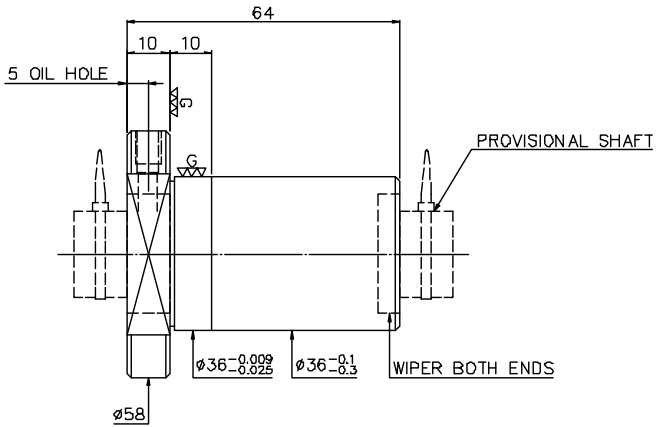

SPEC: R20-10T3-FSI

MAX. AXIAL LOAD (kgf)		LUBRICATION		PRELOAD (kgf)	~
MAX. ROTATIONAL SPEED (rpm)		SPACE BALL		R.D	~
DN VALUE		E1 TYPE ASSEMBLY METHOD		S.F (kgf)	
MAX. FEED RATE (m/min)		CUSTOMER DRAWING NO.		DRAG TORQUE (kgf-cm)	
ACCELERATION (m/sec²)		CUSTOMER MC TYPE		DIRECTION OF TURN	R
SUPPORT METHOD		CUSTOMER AXIAL TYPE		PC DIA.	20.85
				BALL DIA.	4.763
				BACKLASH ⚠	0.03MAX
				CIRCUIT	3
				LEAD ANGLE	8.68
				DYNAMIC (kgf)	1149
				STATIC (kgf)	2042
				LEAD	10

THREAD LENGTH

E300: ~

UNCHAMFERED USE ☐R0.5 ■R1 ☐R

ROUGH M/C	FIN M/C	GRD	SCALE
25a	6.3a	0.4a	1:X

UNTOL DIMN mm

UP	6	30	120	300	600	1200	2400	2400
10	6	30	120	300	600	1200	2400	OVER
±0.1	±0.2	±0.3	±0.4	±0.5	±0.8	±1.0	±1.5	

MATAL	SH: ROLLED	DATE	2007.07.16
	NT: SNCM220/SCM415	DWG	JANET
THREAD BALL TRACK HRC 56 ~ 62		APPD	MICHELLE
		PROCESS NO.	G
CUSTR	H-CHICAGO		
DWG.NO.	A114IIA3		

HIWIN ® BALLSCREWS

*BREAK SHARP EDGE UNLESS OTHER SPECIFIED.
*未倉倒角者以R0.5MAX

THREAD END ALLOWS ABOVE LENGTH OUT OF HARDNESS TOLERANCE

DATE	MODIFICATION	APPROVED
2007.07.16	MOD ⚠	MICHELLE

* PLEASE IGNORE CHINESE CHARACTERS WHICH ARE FOR OUR REFERENCE ONLY.